	2742	2717	2698-99 2700	2679	2643-4	2620	2645	2632	2629	2588	2571	2650	No. OF MACHINES ON CONTRACT			
	1	1	3	1	2	1	1	1	1	1	1	1				
TOTAL NUMBER REQUIRED													CONTRACT	PARTS REQUIRED FOR CONTRACT	ITEM No	PATTERN No	MATERIAL
	1	3	18	6	12	3	6	6	3	2	3	3		6 STD PIPE-2 3/4" LG (THREADED)	1	SEE DETAIL	PIPE
	1	3	18	6	12	3	6	6	3	2	3	3		6 STD. PIPE CAP	2		"
	2	6	36	12	24	6	12	12	6	4	6	6		HANDLES 3/4 × 4	3		STL.
	1	3	18	6	12	3	6	6	3	2	3	3		PLATE 9 × 3/8 × 9	4		"
	2	6	36	12	24	6	12	12	6	4	6	6		GASKET 1/8 THK × 6 3/4 DIA (ABT)	5	FIT IN (2)	HYDROIL
	1	2	12	4	8	1	4	4	1	2		1		FALK SPLASHPROOF AIR VENT 3/4	6		O.S.P.

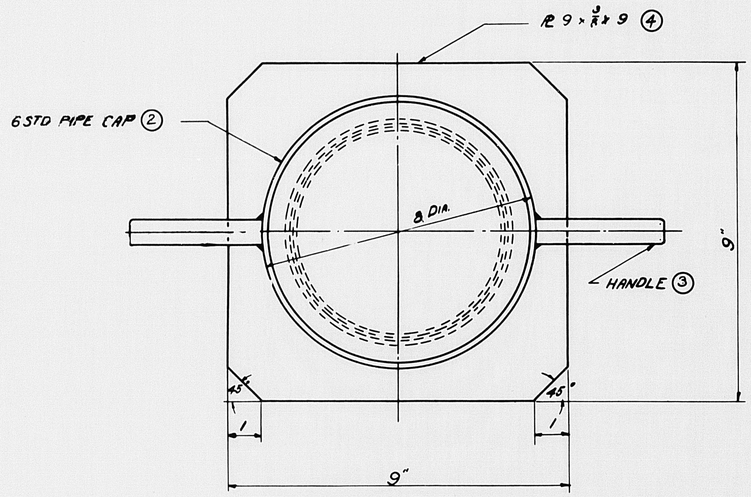

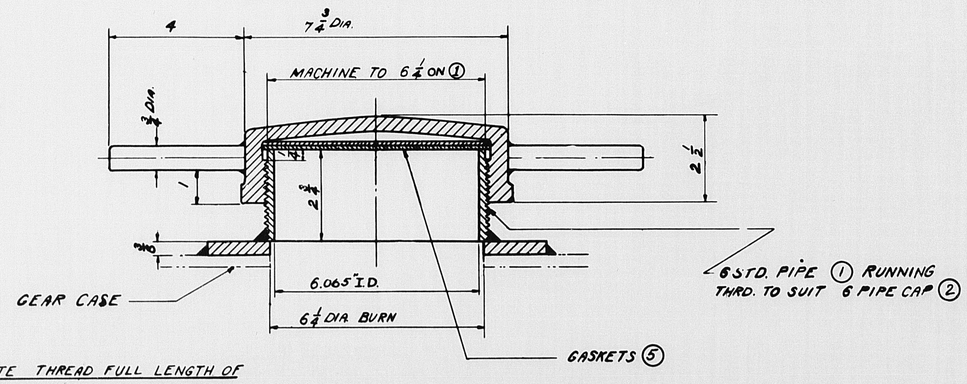

NOTE THREAD FULL LENGTH OF PIPE STOCK AND CUT OFF LENGTHS TO SUIT ITEM (1)

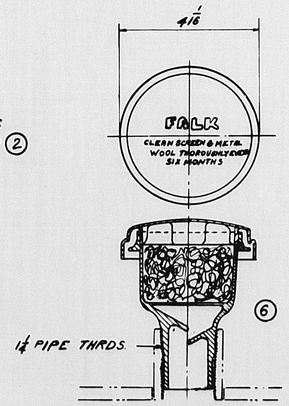

THIS DRAWING IS THE PROPERTY OF THE WELLMAN ENGINEERING CO., LOANED TO THE RECIPIENT WHO AGREES THAT IT SHALL NOT BE GIVEN OUT, COPIED OR DUPLICATED FOR THE USE OF ANOTHER BUT USED ONLY BY THE RECIPIENT FOR THE PURPOSE OF MAINTAINING THE EQUIPMENT TO WHICH IT REFERS

DATE	CHANGE	ITEM	DESCRIPTION OF REVISION
Nov 8-50	No Rev'd in	Items - 1-2-3-4-5	increased -

H-67283

THE WELLMAN ENGINEERING CO.
CLEVELAND, OHIO., U. S. A

CONTRACT NO. _____ PROPOSAL NO. _____

SUBJECT STANDARD HANDHOLE BASE & COVER & VENT FOR GEAR CASES

DRAWN BY R.R.P. CHECKED BY C.W.B. MAY-19 1948 APPROVED BY G.H. 5/19

SCALE 6" 1'-0" DATE 4/26/48 DRAWING No. 90368

TRACED BY

90368